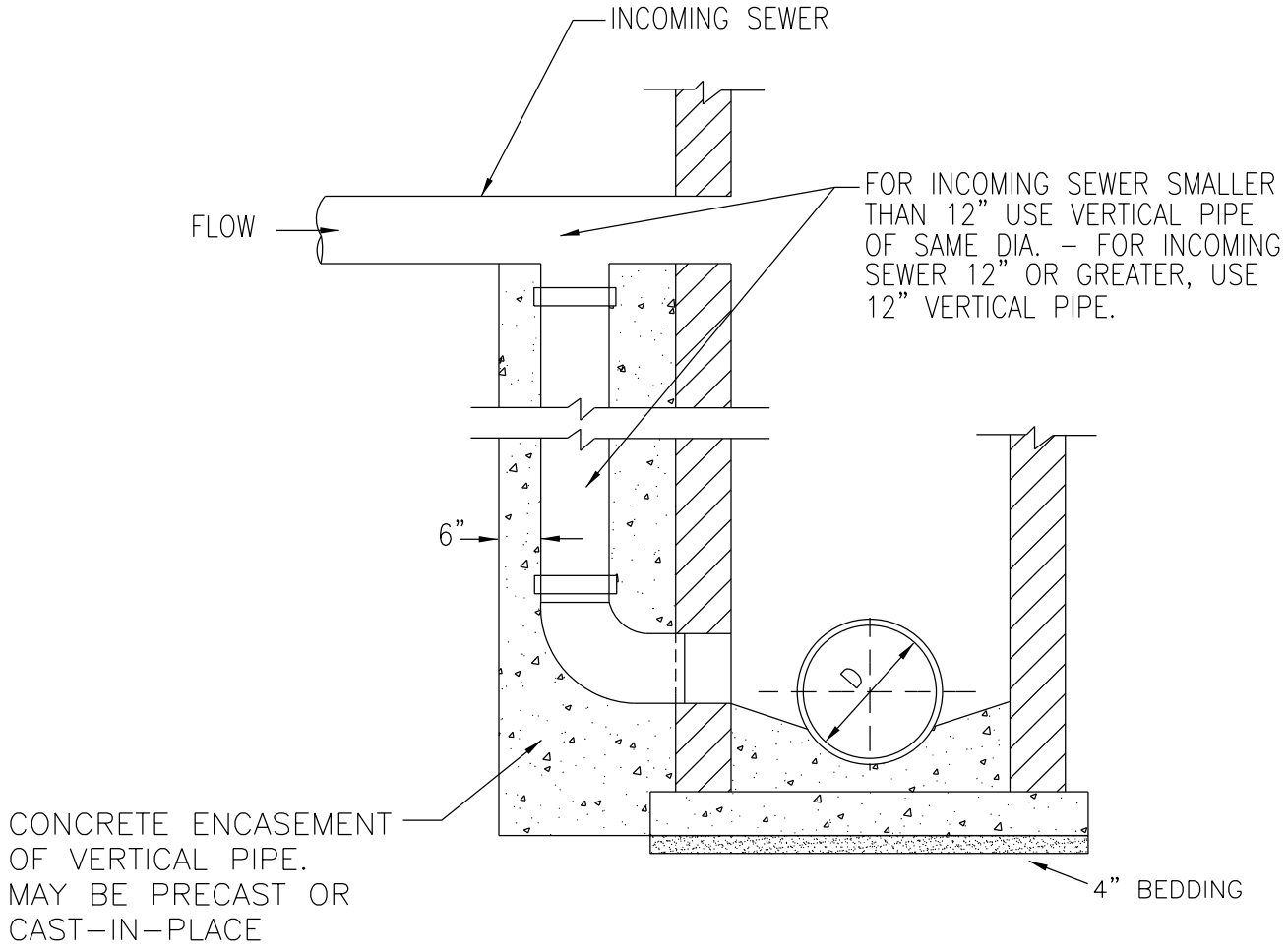

TYPICAL DROP MANHOLE CONNECTION

STANDARD DRAWING NO.6